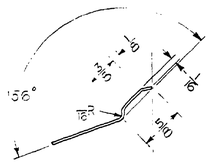

SECTION A–A
FULL SIZE

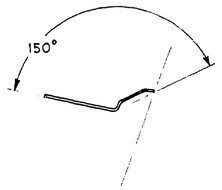

SECTION B–B
FULL SIZE

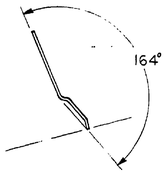

SECTION C–C
FULL SIZE

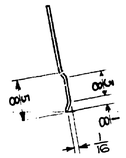

VIEW D–D
FULL SIZE

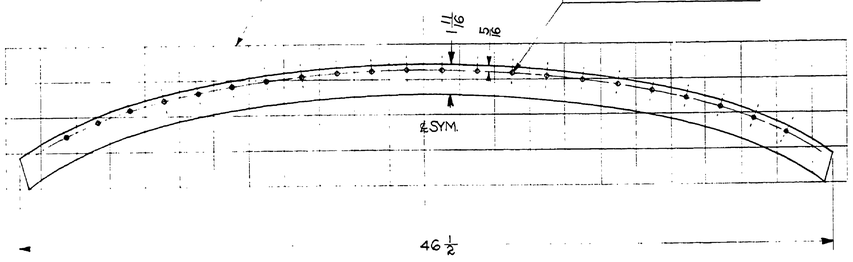

DETAIL (FLAT PATTERN)

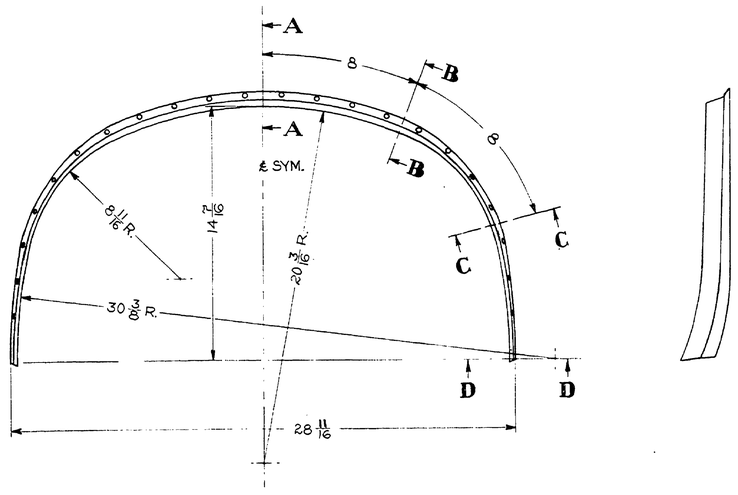

LET.	REVISION	DATE	BY	MODEL	PER PLANE	NEXT ASSEMBLY	SUPERSEDES	SUP. BY

THIS DRAWING IS THE PROPERTY OF THE PIPER AIRCRAFT CORP. AND ITS POSSESSION BY UNAUTHORIZED PERSONS SHALL NOT BE CONSTRUED AS PERMISSION TO REPRODUCE FOR SALE, IN WHOLE OR IN PART, ANY DEVICES SHOWN THEREON.

PIPER AIRCRAFT CORP.
LOCK HAVEN, PENNA.

PART No.	No. REQ.	SIZE	DESCRIPTION
		.032×6⅞×46½	3S-½H. ALUM.
		MATERIAL	

SCALE 3 IN. = 1 FT & NOTED | TOTAL WT.-LBS.

FINISH—PIPER SPECIFICATION #10

MANUFACTURING PRACTICES—PIPER SPECIFICATION #9

STRIP-WINDSHIELD
FRONT ATTACHMENT

DRAFTSMAN	CHECKER	STANDARDS	
H. R. K. 6-13-49	C. E. K. 6-17-49		12377

855

PHILADELPHIA BLUE PRINT CO.

A855